RACK AND PINION POWER STEERING GEAR

COMPONENTS

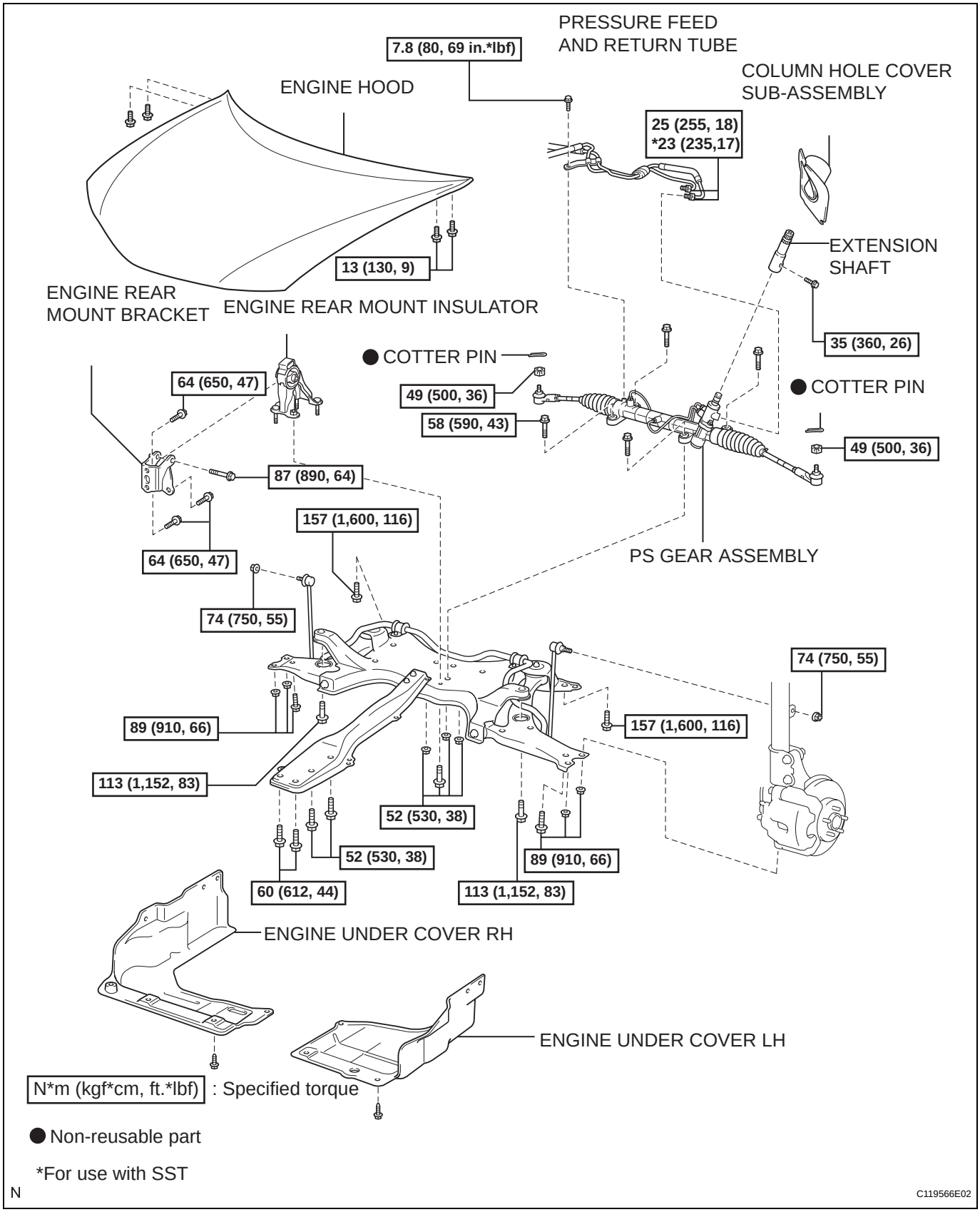

cardiagn.com

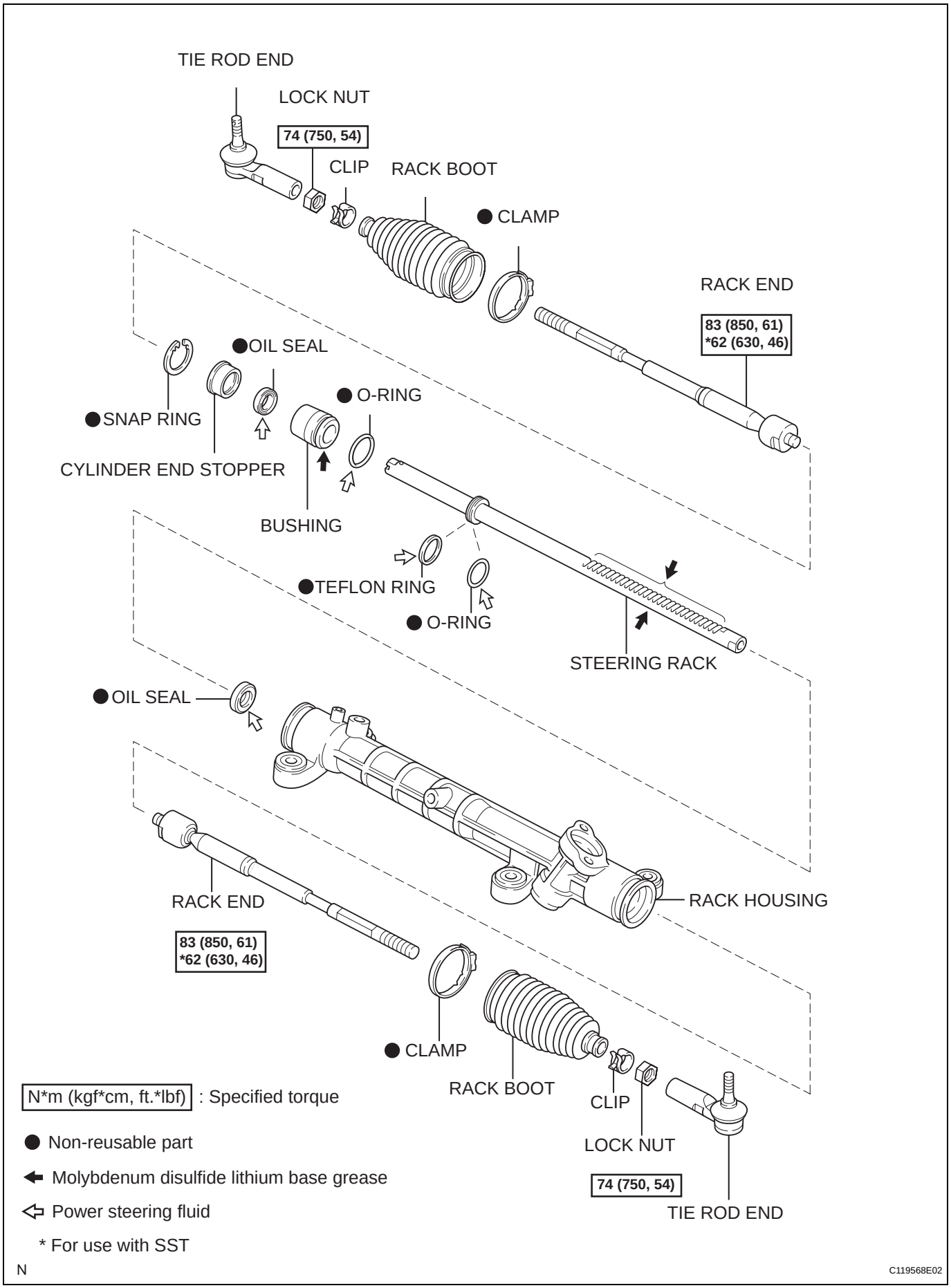

cardiagn.com

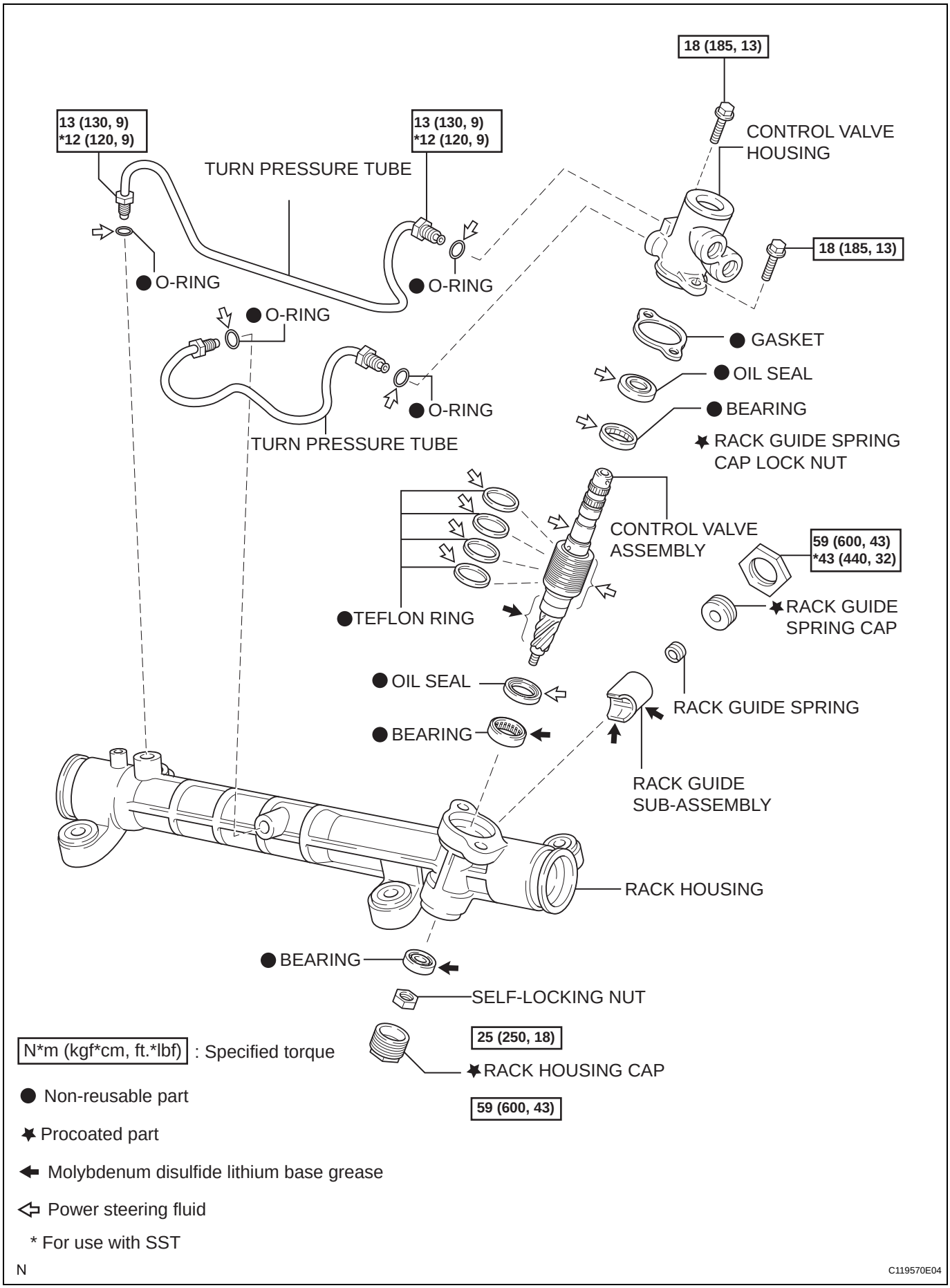

cardiagn.com